March 5th, 2018

MCDJ Dual-rod Cylinder

Thank you for supporting Mindman products.
MCDJ Dual-rod Cylinder will have following changes.

1. Model series

MCDJ-Ø10

2. Reason

According to most of the feedback and suggestions from customers, we will change some of the mounting thread size. The affected dimensions are shown below.

3. Design change

Before

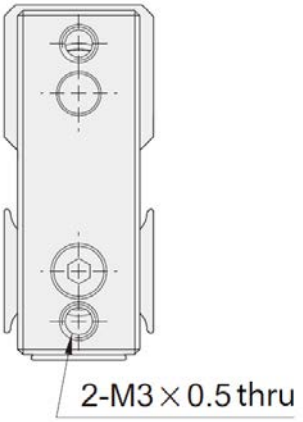

Size	Thread
Ø6	M3x0.5
Ø10	

After

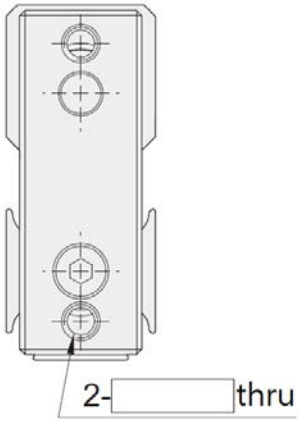

Size	Thread
Ø6	M3x0.5
Ø10	M4x0.7

4.Effective Date

With immediate effect.

5.Other

If there is any question, please contact our sales department.