## ϕ12, ϕ16

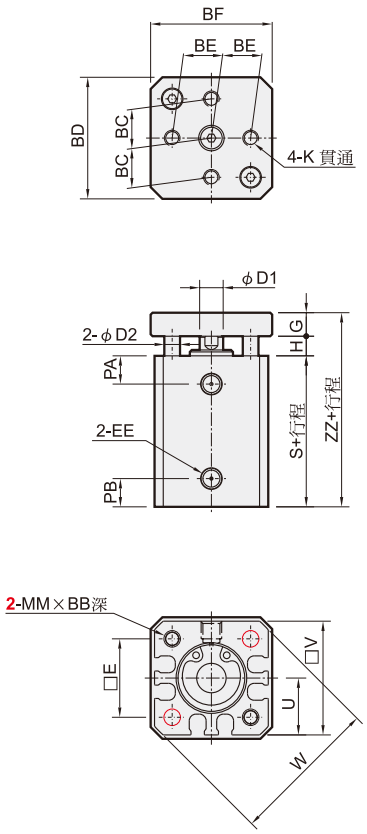


## ϕ20, ϕ25

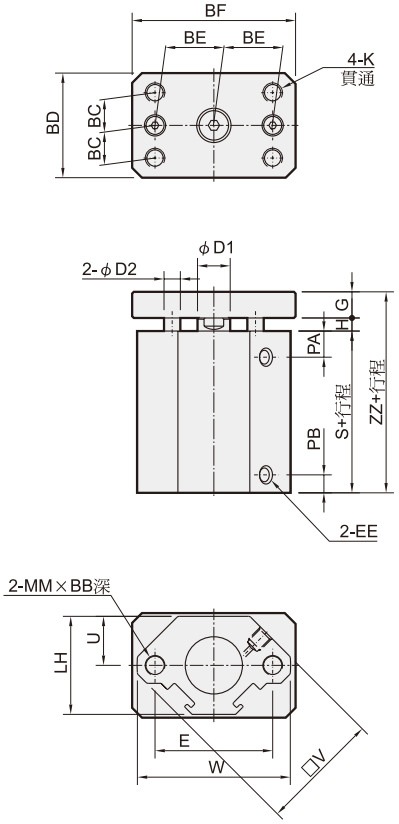


## ϕ32~ϕ100

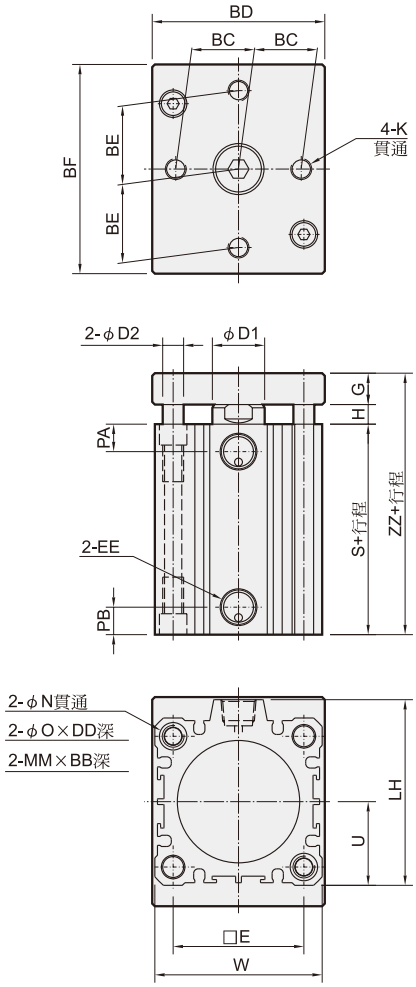


| 代號 / 內徑 | BB | BC | BD | BE | BF | D1 | D2 | DD | E | EE | G | H | K | LH | MM | N | O | PA | PB | S | U | V | W | ZZ |
|---|---|---|---|---|---|---|---|---|---|---|---|---|---|---|---|---|---|---|---|---|---|---|---|---|
| 12 | 10 | 9 | 27 | 9 | 27 | 6 | 4 | | 15.5 | M5×0.8 | 6 | 4.5 | M4×0.7 | | M5×0.8 | | | 6.5 | 6.5 | 22 | 12.5 | 25 | 32 | 32.5 |
| 16 | 10 | 10 | 31 | 10 | 31 | 6 | 4 | | 20 | M5×0.8 | 6 | 5 | M4×0.7 | | M5×0.8 | | | 7.2 | 7.2 | 28.5 | 14.5 | 29 | 38 | 39.5 |
| 20 | 10 | 10 | 32 | 18 | 50 | 10 | 5 | | 36 | M5×0.8 | 8 | 4 | M6×1.0 | 30 | M6×1.0 | | | 8 | 5.5 | 29.5 | 15 | 37 | 47 | 41.5 |
| 25 | 10 | 12 | 37 | 20 | 54 | 12 | 5 | | 40 | M5×0.8 | 8 | 4.5 | M6×1.0 | 35 | M6×1.0 | | | 9.5 | 5.5 | 32.5 | 17.5 | 40 | 52 | 45 |
| 32 | 10 | 16 | 47 | 20 | 56 | 16 | 6 | 7 | 34 | Rc1/8 | 10 | 6.5 | M6×1.0 | 49.5 | M6×1.0 | 5.5 | 9 | 10.5 | 8 | 33 | 22.5 | | 45 | 49.5 |
| 40 | 10 | 19 | 54 | 25 | 64 | 16 | 6 | 7 | 40 | Rc1/8 | 10 | 6.5 | M8×1.25 | 57 | M6×1.0 | 5.5 | 9 | 11 | 8 | 39.5 | 26 | | 52 | 56 |
| 50 | 14 | 24 | 66 | 30 | 80 | 20 | 8 | 8 | 50 | Rc1/4 | 12 | 7.5 | M8×1.25 | 71 | M8×1.25 | 6.6 | 10.5 | 10.5 | 10.5 | 40.5 | 32 | | 64 | 60 |
| 63 | 18 | 31 | 80 | 38 | 94 | 20 | 10 | 10.5 | 60 | Rc1/4 | 12 | 7.5 | M8×1.25 | 84 | M10×1.5 | 9 | 14 | 14.5 | 10.5 | 46 | 38.5 | | 77 | 65.5 |
| 80 | 22 | 38 | 100 | 40 | 108 | 25 | 12 | 11 | 77 | Rc1/4 | 15 | 15 | M10×1.5 | 104 | M12×1.75 | 11 | 17.5 | 20 | 12 | 52 | 49 | | 98 | 82 |
| 100 | 22 | 46 | 120 | 48 | 128 | 30 | 12 | 11 | 94 | Rc1/4 | 18 | 19 | M10×1.5 | 123.5 | M12×1.75 | 11 | 17.5 | 22 | 13 | 57.5 | 58.5 | | 117 | 94.5 |