SDB TA/TB (Extra purchase)

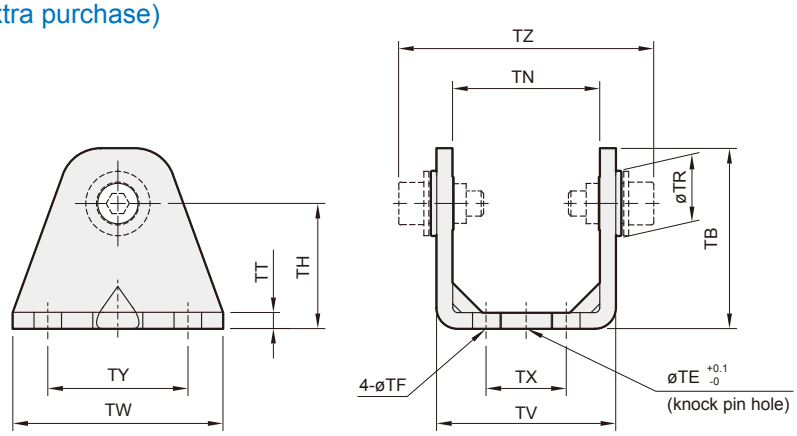

SDB-R

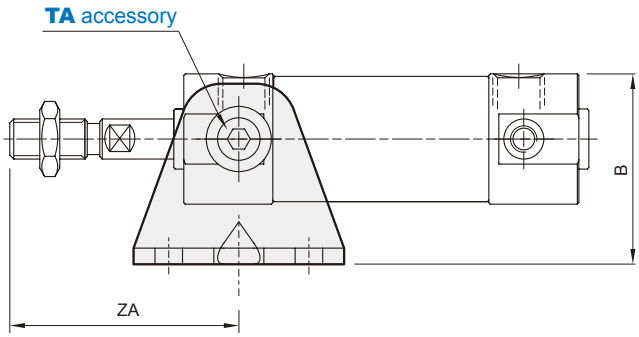

SDB-H

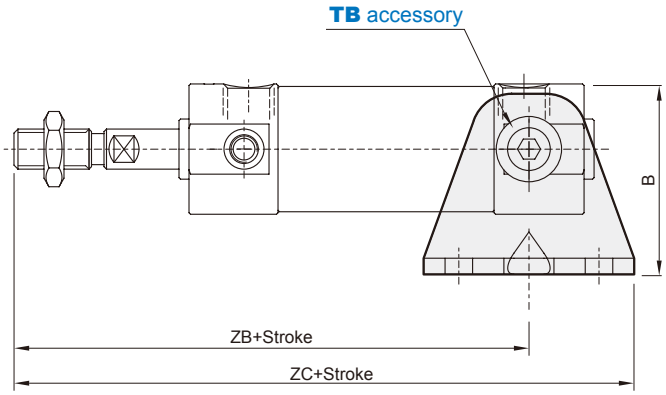

Unit: inch

Code / Tube I.D.	B	TB	TE	TF	TH	TN	TR	TT	TV	TW	TX	TY	TZ	ZA	ZB	ZC	Applicable pin O.D.
20	1.50	1.42	0.394	0.22	0.98	1.15	0.55	0.13	1.41	1.65	0.63	1.10	2.00	1.43	3.29(3.6)	3.80(4.11)	0.315 -0.0016 -0.0030
25	1.79	1.69	0.394	0.22	1.18	1.30	0.63	0.13	1.57	1.65	0.79	1.10	2.29	1.55	3.41(3.72)	3.92(4.23)	0.394 -0.0016 -0.0030
32	2.13	1.97	0.394	0.26	1.38	1.59	0.71	0.18	1.94	1.89	0.87	1.10	2.81	2.06	4.04(4.31)	4.51(4.82)	0.472 -0.0020 -0.0037
40	2.50	2.28	0.394	0.26	1.57	1.94	0.87	0.18	2.30	2.20	1.18	1.18	3.48	2.10	4.31(4.59)	4.78(5.14)	0.551 -0.0020 -0.0037
50	3.11	2.76	0.787	0.35	1.97	2.38	0.98	0.24	2.85	2.52	1.42	1.42	4.29	2.58	5.14(5.58)	5.69(6.17)	0.630 -0.0020 -0.0037
63	3.78	3.23	0.787	0.43	2.36	2.94	1.06	0.31	3.56	2.91	1.81	1.81	5.15	2.58	5.14(5.58)	5.69(6.17)	0.709 -0.0020 -0.0037

( ): Dimension for long stroke.