MEQG-8 series

ROD TYPE ELECTRIC CYLINDER (WITHOUT MOTOR)

mindman

Specification

Model			MEQG-8		
Positioning repeatability		(mm)	±0.01		
Ball screw lead		(mm)	5	10	20
Maximum speed (*1)		(mm/s)	250	500	1000
Maximum payload (*2)	Horizontal	(kg)	50	30	18
	Vertical	(kg)	15	8	3
Rated thrust (*3)		(N)	683 (1388)	341 (694)	174 (347)
Stroke / pitch (*4)		(mm)	50~800 / 50 Pitch		
Motor output		(W)	200, 400		
Ball screw spec.		(mm)	C7ø16		
Coupling		(mm)	10×14/11(*6)		
Home sensor (Outside)			CS-6T (NPN)		
Anti-rotating accuracy (*5)		(θ)	±0°		

*1.Acceleration and deacceleration value is set 0.2 second.

*2.If payload is near maximum, it requires to collocate externally with auxiliary guideway for bearing radial load.

*3.( ) The value for power output 400W.

*4.When the stroke is over 750mm, the run-out of the ballscrew will occur. We recommend to low down the working speed under this circumstances.

*5.Avoid using the electric actuator in such a way that rotational torque would be applied to the piston rod. This may cause deformation of the anti-rotating guide, abnormal responses of the auto switch, play in the internal guide or an increase in the sliding resistance.

*6. Motor 200W shaft diameter: Panasonic: 11mm, Other: 14 mm.

Anti-rotating accuracy of rod

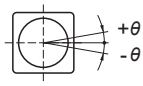

Order example

MEQG-8 — L10 — 100 — BC — M20 — C4

Model

Size

Stroke

50~800 mm
50 mm pitch

Ball screw lead	
L05	5 mm
L10	10 mm
L20	20 mm

Motor position	
BC	Direct connection
BM	Lower side
BR	Right side
BL	Left side

Motor brand		Flange face	
M	Mitsubishi	20	200W
	Yaskawa	40	400W
	Delta		
P	Panasonic		

Home sensor	
Out side	
C	Motor side
D	Opposite motor side
No sensor	
E	None

Limit sensor	
Out side	
3	1 Pc
4	2 Pcs
No sensor	
5	None

BC

Motor direct connection

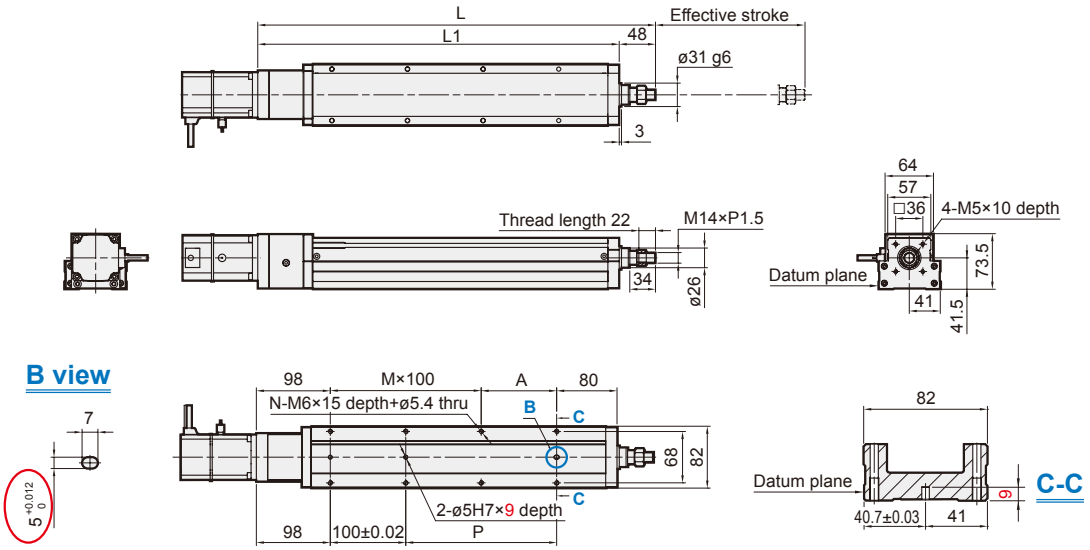

Unit: mm

Stroke	50	100	150	200	250	300	350	400	450	500	550	600	650	700	750	800
L	376	426	476	526	576	626	676	726	775	826	876	926	976	1026	1076	1126
L1	328	378	428	478	528	578	628	678	728	778	828	878	928	978	1028	1078
A	50	100	50	100	50	100	50	100	50	100	50	100	50	100	50	100
M	1	1	2	2	3	3	4	4	5	5	6	6	7	7	8	8
N	6	6	8	8	10	10	12	12	14	14	16	16	18	18	20	20
P	50	100	150	200	250	300	350	400	450	500	550	600	650	700	750	800
KG	5.08	5.44	5.81	6.17	6.54	6.9	7.27	7.63	8	8.36	8.73	9.09	9.46	9.82	10.19	10.55

BM

Motor on lower side

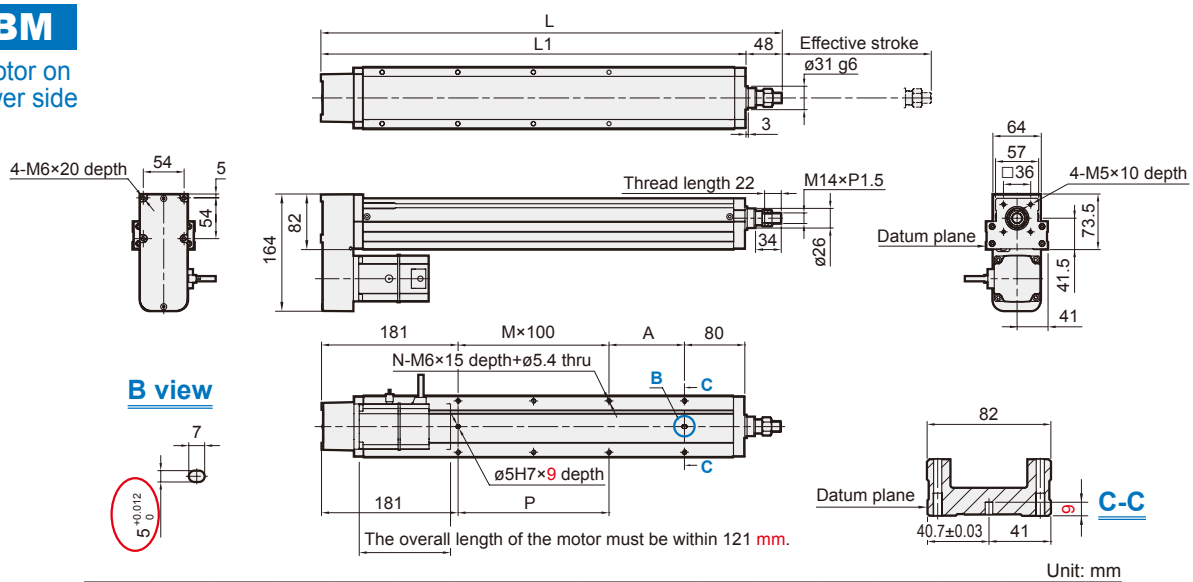

Unit: mm

Stroke	50	100	150	200	250	300	350	400	450	500	550	600	650	700	750	800
L	359	409	459	509	559	609	659	709	775	809	859	909	959	1009	1059	1109
L1	311	361	411	461	511	561	611	661	711	761	811	861	911	961	1011	1061
A	50	100	50	100	50	100	50	100	50	100	50	100	50	100	50	100
M	0	0	1	1	2	2	3	3	4	4	5	5	6	6	7	7
N	4	4	6	6	8	8	10	10	12	12	14	14	16	16	18	18
P	50	100	150	200	250	300	350	400	450	500	550	600	650	700	750	800
KG	5.82	6.17	6.53	6.88	7.24	7.59	7.95	8.3	8.66	9.01	9.37	9.72	10.08	10.43	10.79	11.14

* When motor with brake assembled on lower side, or the total length over than spec limit, it may not use standard pinhole. Please contact us if you need more information and requirement.

MEQG-8 Dimensions

ROD TYPE ELECTRIC CYLINDER (WITHOUT MOTOR)

mindman

BL

Motor on left side

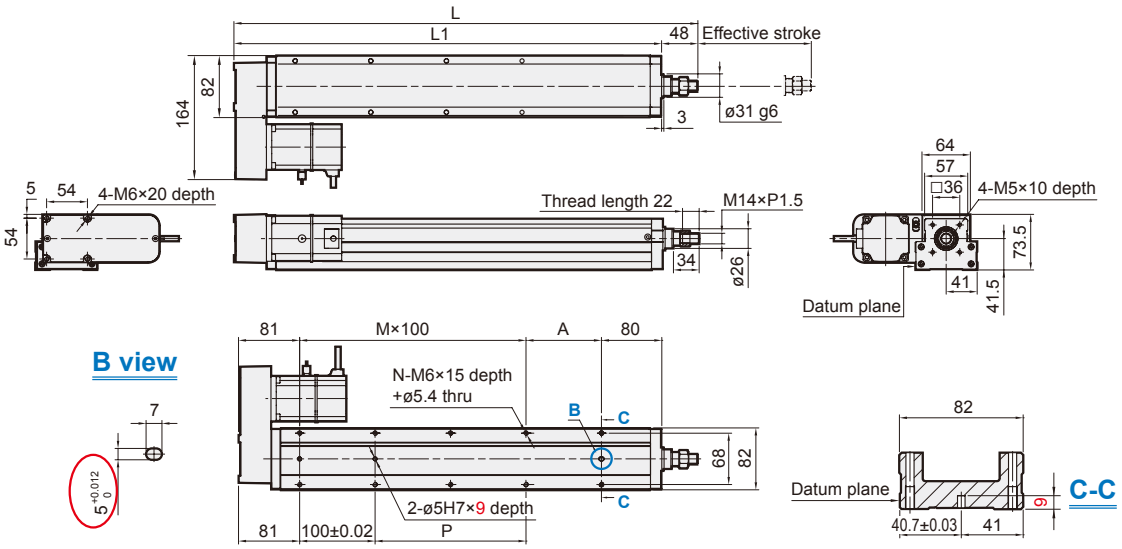

Unit: mm

Stroke	50	100	150	200	250	300	350	400	450	500	550	600	650	700	750	800
L	359	409	459	509	559	609	659	709	775	809	859	909	959	1009	1059	1109
L1	311	361	411	461	511	561	611	661	711	761	811	861	911	961	1011	1061
A	50	100	50	100	50	100	50	100	50	100	50	100	50	100	50	100
M	1	1	2	2	3	3	4	4	5	5	6	6	7	7	8	8
N	6	6	8	8	10	10	12	12	14	14	16	16	18	18	20	20
P	50	100	150	200	250	300	350	400	450	500	550	600	650	700	750	800
KG	5.82	6.17	6.53	6.88	7.24	7.59	7.95	8.3	8.66	9.01	9.37	9.72	10.08	10.43	10.79	11.14

BR

Motor on right side

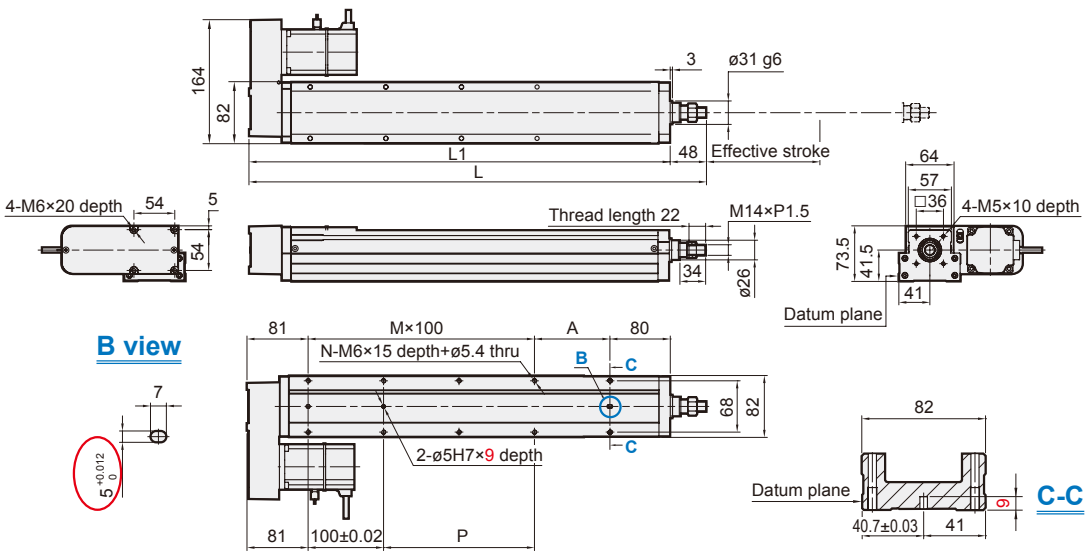

Unit: mm

Stroke	50	100	150	200	250	300	350	400	450	500	550	600	650	700	750	800
L	359	409	459	509	559	609	659	709	775	809	859	909	959	1009	1059	1109
L1	311	361	411	461	511	561	611	661	711	761	811	861	911	961	1011	1061
A	50	100	50	100	50	100	50	100	50	100	50	100	50	100	50	100
M	1	1	2	2	3	3	4	4	5	5	6	6	7	7	8	8
N	6	6	8	8	10	10	12	12	14	14	16	16	18	18	20	20
P	50	100	150	200	250	300	350	400	450	500	550	600	650	700	750	800
KG	5.82	6.17	6.53	6.88	7.24	7.59	7.95	8.3	8.66	9.01	9.37	9.72	10.08	10.43	10.79	11.14