MAFR411 series Stainless steel # 316

AIR UNIT (F.R.UNIT)

mindman

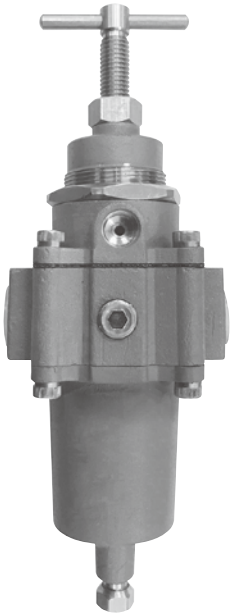

Feature

- The material of body, adjust mechanism, screw & bolt, bottom cover and inside part is AISI 316L.
- Applications include marine environments, oil and gas production, chemicals and food processing, medical analysis etc.

Specification

Model	MAFR411	
Bore No.	15A	20A
Port size	1/2	3/4
Medium	Air	
Max. operating perssure	3 MPa	
Regulated pressure range (*)	Standard 0.1~1 MPa	
	Optional 0.17~1.75 MPa	
Ambient temperature	–20~+80°C (No freezing)	
Flow rate (*)	7840 L/min	10050 L/min
Filter element (*)	25μm	
Drain capacity	100 cm^3	
Attachment	Pressure gauge (PG-50S2), Bracket (B1-MAR311)	
Weight	2000 g	

* Flow is at inlet pressure 1MPa, outlet pressure 0.6 MPa with pressure drop Δ 0.1 MPa.
* If your inquiry is not included in above table, please kindly contact us.

Order example

MAFR411 — 20A — □ C B — □

- MODEL
- PORT SIZE
  15A: 1/2
  20A: 3/4
- Blank: Without
  C: External pressure gauge (PG-50S2)
- BRACKET
  Blank: Without bracket
  B: L type bracket
- PORT THREAD
  Blank: Rc thread
  G: G thread
  NPT: NPT thread
- ADJUSTABLE PRESS. RANGE
  Blank: 0.1~1 MPa
  17K: 0.17~1.75 MPa (*)
  * 17K only for hex head screw

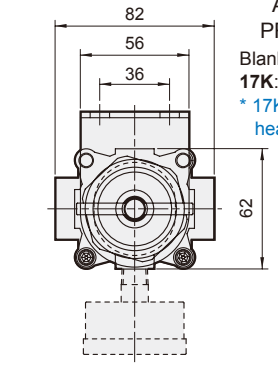

17K hex head

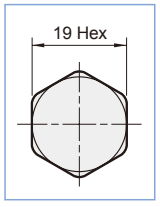

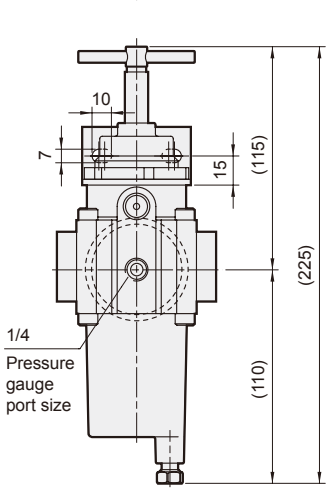

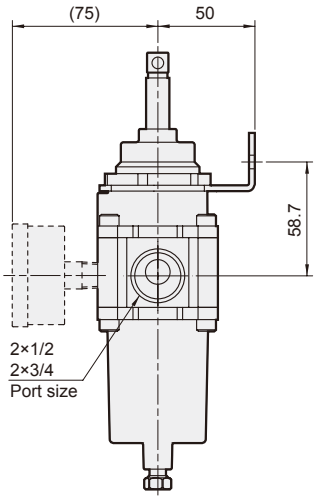

Flow feature

15A Primary pressure 1 MPa

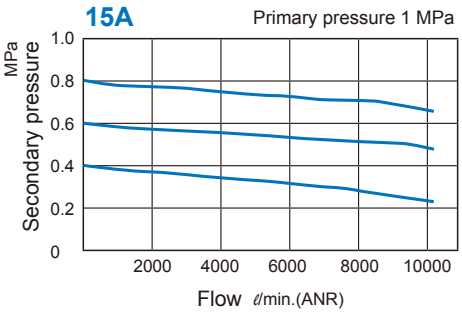

20A Primary pressure 1 MPa

