Order example

MVSC — 220 — 5P

MODEL

BLOCKING PLATE
3P: for 3 port
5P: for 5 port

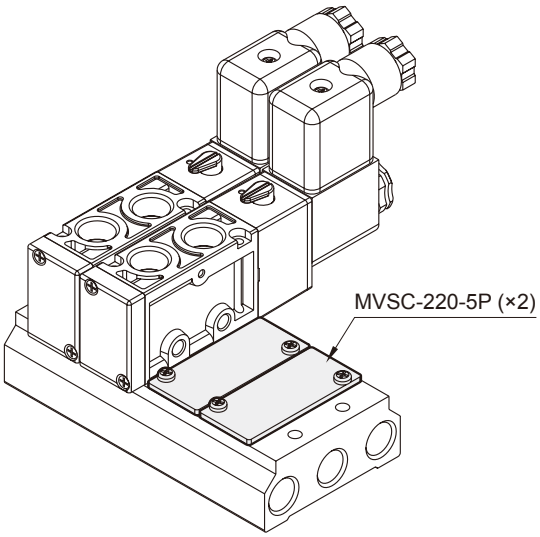

Blocking plate parts

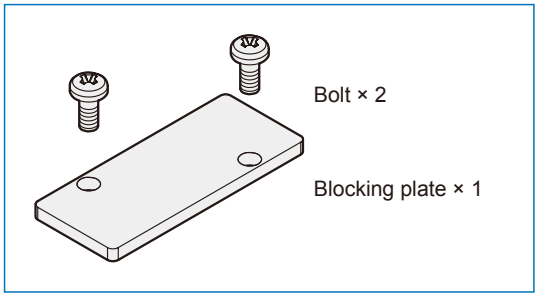

Blocking plate table

Applicable model	Symbol for order	
Solenoid valve	**3P**: for 3 port	**5P**: for 5 port
MVSC-220	MVSC-220-3P	MVSC-220-5P
MVSC-260	—	MVSC-260-5P
MVSC-300	MVSC-300-3P	MVSC-300-5P
MVSC-460	MVSC-460-3P	MVSC-460-5P
MVSC1-150	—	MVSC1-150-5P
MVSC1-180	MVSC1-180-3P	MVSC1-180-5P
MVSC1-220	MVSC-220-3P (*1)	MVSC-220-5P (*1)
MVSD1-180	—	MVSD1-180-5P
MVSE-260	—	MVSC-260-5P (*1)
MVSE-300	—	MVSE-300-5P
MVSE-500	—	MVSC-460-5P (*1)
MVSF-100	MVSF-100-3P	MVSF-100-5P
MVSG-180	—	MVSG-180-5P
MVSP-156	—	MVSY-156-5P (*2)
MVSP-188	—	MVSY-188-5P (*2)
MVSY-100	—	MVSY-100-5P
MVSY-156	—	MVSY-156-5P
MVSY-188	—	MVSY-188-5P
MVSZ-100	—	MVSZ-100-5P
MVDY-100	MVDY-100-3P	—
MVB-100	—	MVSY-100-5P (*2)
MVB1-100	—	MVSY-100-5P (*2)
MVB-156	—	MVSY-156-5P (*2)
MVB-220	MVSC-220-3P (*1)	MVSC-200-5P (*1)
MVB-300	MVSC-300-3P (*1)	MVSC-300-5P (*1)
MVB-460	MVSC-460-3P (*1)	MVSC-460-5P (*1)
MVE-100	—	MVSY-100-5P (*2)
MVE-156	—	MVSY-156-5P (*2)
Pilot valve	**3P**: for 3 port	**5P**: for 5 port
MVAA-150	—	MVSC1-150-5P (*3)
MVAA-180	MVSC1-180-3P (*3)	MVSC1-180-5P (*3)
MVAA-220	MVSC-220-3P (*1)	MVSC-220-5P (*1)
MVAA-260	—	MVSC-260-5P (*1)
MVAA-300	MVSC-300-3P (*1)	MVSC-300-5P (*1)
MVAA-460	MVSC-460-3P (*1)	MVSC-460-5P (*1)

*1. Use the same blocking plate with **MVSC**.
*2. Use the same blocking plate with **MVSY**.
*3. Use the same blocking plate with **MVSC1**.